Physics 10164 - Exam 4D

Partial credit will be given provided you show all work and are solving parts of the problem correctly. Points will be deducted if you don't show your work even if you get the right answer. Clearly indicate your answer with a circle or a box and remember to include correct units and significant figures.

1. (30 pts) A woman standing 1.5 meters away from a mirror sees an inverted image of herself that is 25% of her actual size. If the woman wants to see an upright image of herself in the same mirror that is 75% larger than her actual size, how close does she need to stand to the mirror?

$p = 1.5\ m$ $\quad -0.25 = -\frac{q}{p}$

$M = -0.25$ $\quad q = 0.25p = 0.375$

$\frac{1}{1.5} + \frac{1}{.375} = \frac{1}{f}$ $\quad f = 30\ cm$

$M = 1.75 = -\frac{q}{p}$ $\quad q = -1.75p$

$\frac{1}{p} + \frac{1}{q} = \frac{1}{30}$

$\frac{1}{p} + \frac{1}{-1.75p} = \frac{1}{30}$

$\frac{1.75}{1.75p} - \frac{1}{1.75p} = \frac{1}{30}$

$\frac{0.75}{1.75p} = \frac{1}{30}$ $\quad p = \frac{(30)(.75)}{1.75} = \boxed{13\ cm}$

2. (30 pts) A diver is 95 meters below the surface of the water (n = 1.33) and 240 meters from the shoreline. The diver aims a laser beam so that it emerges from the water at a point 190 meters from the shoreline. If the beam can be seen by a person standing on the roof of a building on the shoreline, how tall is the building?

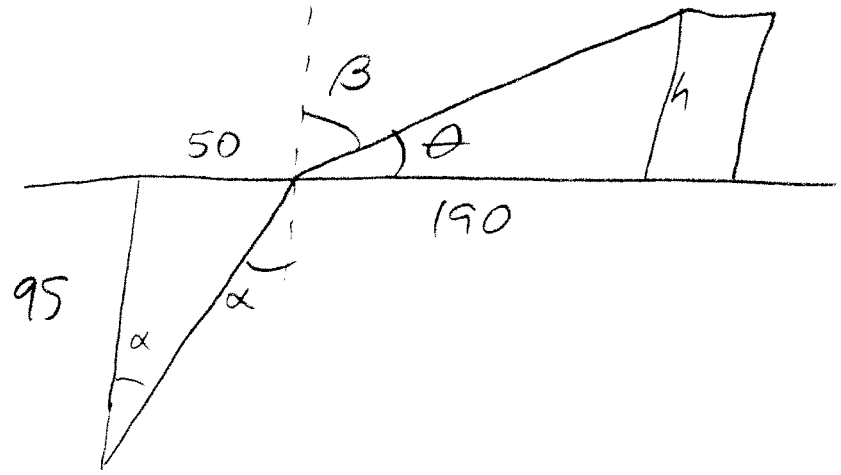

$$\alpha = \tan^{-1}\left(\frac{50}{95}\right) = 27.76^\circ$$

$$1.33 \sin\alpha = 1.0 \sin\beta$$

$$\beta = 38.3^\circ$$

$$\theta = 90 - \beta = 51.7^\circ$$

$$\tan 51.7^\circ = \frac{h}{190}$$

$$\boxed{h = 240\ m}$$

3. (40 pts) A thin coating (n = 1.42) is applied to a glass lens (n = 1.50). What is the minimum thickness of this coating that will allow yellow light (550 nm) to be transmitted brightly through this apparatus?

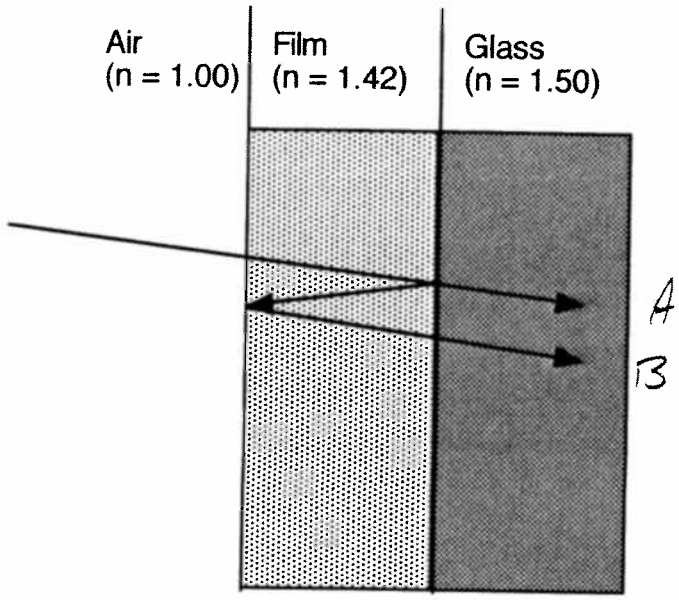

$$\delta_A = 0$$

$$\delta_B = \frac{1}{2} + 0 + \frac{2nt}{\lambda_0}$$

$$\frac{2nt}{\lambda_0} + \frac{1}{2} = 0, 1, 2, \ldots$$

$$0: \quad \frac{2nt}{\lambda_0} = -\frac{1}{2} \quad \times$$

$$1: \quad \frac{2nt}{\lambda_0} = \frac{1}{2} \quad \Rightarrow \lambda_0 = 4nt =$$

$$550\,nm = 4(1.42)(t)$$

$$\boxed{t = 97\,nm}$$