Physics 10164 - Exam 1A

Partial credit will be given provided you show all work and are solving parts of the problem correctly. Points will be deducted if you don't show your work even if you get the right answer. Clearly indicate your answer with a circle or a box and remember to include correct units and significant figures.

1. (35 pts) Four charges are arranged in a square as shown below. q1 = +10 μC, q2 = -20 μC, q3 = -30 μC, q4 = +40 μC. Find the magnitude and direction of the force on the charge q4. Answer with two significant figures.

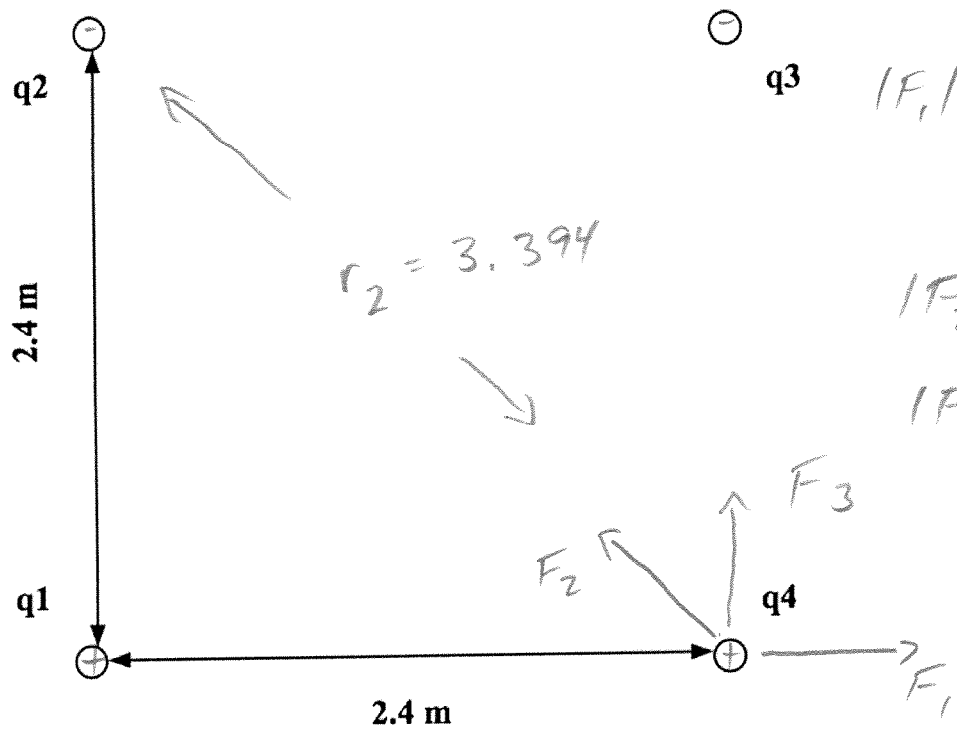

$|F_1| = \frac{k_c q_1 q_4}{r_1^2}$

$= 0.625\ N$

$|F_2| = 0.625\ N$

$|F_3| = 1.875\ N$

$F_{1,x} = +0.625 \quad F_{1y} = 0$

$F_{2,x} = -0.442 \quad F_{2y} = +0.442$

$F_{3,x} = 0 \quad F_{3y} = +1.875$

$0.183 \quad 2.317$

$|\vec{F}_{TOT}| = \sqrt{.183^2 + 2.317^2} = \boxed{2.3\ N}$

$\theta = \tan^{-1}\left(\frac{2.317}{.183}\right) = \boxed{85^\circ \text{ above } +x}$

2. (35 pts) A 240 gram mass with a charge of 45 μC is dropped from an altitude of 17 meters above ground level. This charge is affected only by gravity (assumed constant) and a uniform electric field in the region.

a) If the mass takes 2.8 seconds to reach the ground, determine the magnitude and direction of the electric field that the mass moves through.

b) If the voltage at ground level is zero, what is the voltage at an altitude of 17 meters above ground level?

a) $\Delta y = +17$

$V_{0y} = 0$

Assume down is positive. $V_y = ?$

$a_y = ?$

$t = 2.8\ s$

$\Delta y = v_0 t + \frac{1}{2} a t^2$

$17 = 0 + \frac{1}{2} a (2.8)^2$

$a = 4.34\ m/s^2 < 9.8\ m/s^2$

so $\vec{F}_E$ + $\vec{E}$ point up to partially offset gravity.

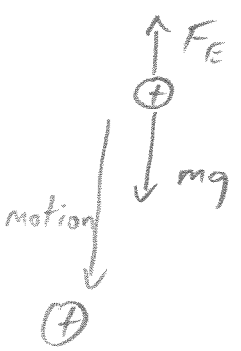

$\Sigma F_y = mg - qE = ma$

$(.240)(9.8) - (45 \times 10^{-6})E = (.240)(4.34)$

$(45 \times 10^{-6})E = 1.31$

$\vec{E} = 29000\ \frac{V}{m}$, up

b) If $\vec{E}$ points up, $V(17\ m)$ is less than $V(ground)$.

$V(17\ m) = -(29000)(17) = -5.0 \times 10^5$ Volts

#3. (30 pts) For the circuit shown below, determine the voltage difference across the capacitor C3.

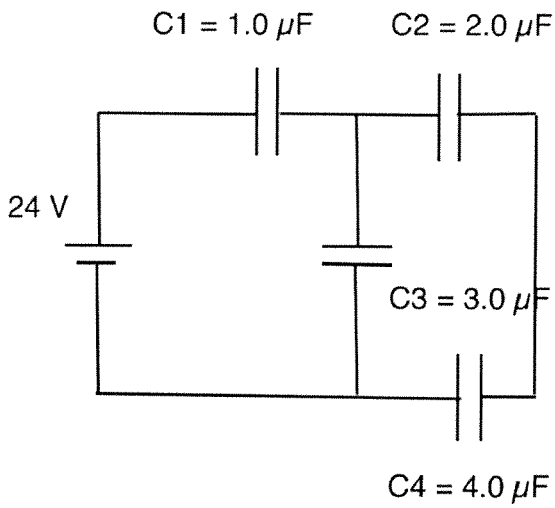

$$\frac{1}{C_{24}} = \frac{1}{C_2} + \frac{1}{C_4}$$

$$C_{24} = 1.33\ \mu F$$

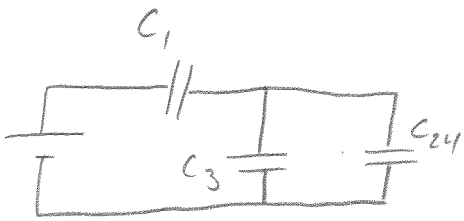

$$C_{234} = C_3 + C_{24}$$
$$= 4.33\ \mu F$$

$$\frac{1}{C_{1234}} = \frac{1}{1} + \frac{1}{4.33}$$

$$C_{1234} = 0.812\ \mu F$$

$$\Delta V_{1234} = 24\ V \quad \text{(given)}$$

$$\Rightarrow Q_{1234} = 19.5\ \mu C$$

Thus $Q_1 = Q_{234} = Q_{1234} = 19.5\ \mu C$ (series)

If $Q_{234} = 19.5\ \mu C$ + $C_{234} = 4.33\ \mu F$,

then $\Delta V_{234} = 4.5$ Volts

$\Delta V_{234} = \Delta V_3 = \Delta V_{24}$ (parallel)

$\Delta V_3 = 4.5$ Volts