Physics 10164 - Summer 2019 - Exam #2B

Partial credit will be given provided you show all work and are solving parts of the problem correctly. Points will be deducted if you don't show your work even if you get the right answer. Clearly indicate your answer with a circle or a box and remember to include correct units and significant figures.

1. (30 pts) In the circuit below, the battery has an EMF of 12 Volts, and the resistors are R_1 = 1.0 Ohm, R_2 = 2.0 Ohm, R_3 = 3.0 Ohm, R_4 = 4.0 Ohm.

Find the voltage drop across each of the four resistors.

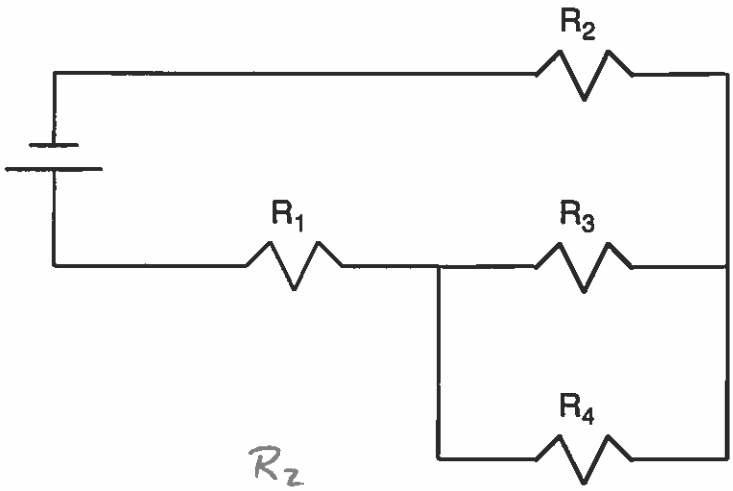

$$\frac{1}{R_{34}} = \frac{1}{3} + \frac{1}{4}$$

$$\Rightarrow R_{34} = 1.71\ \Omega$$

$$R_{TOT} = R_1 + R_{34} + R_2$$

$$= 4.71\ \Omega$$

$$I_{TOT} = \frac{12}{4.71} = 2.545\ A$$

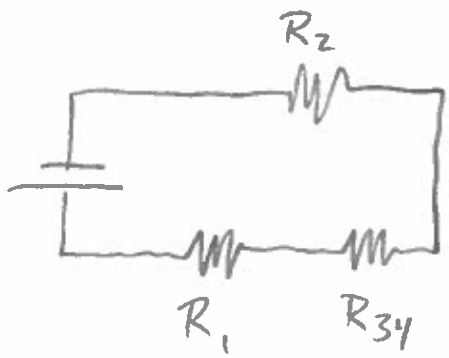

$I_{34} = 2.545\ A$

$R_{34} = 1.71\ \Omega$

$\Rightarrow \Delta V_{34} = 4.4\ V$

Since R_3 + R_4 are parallel

$$\boxed{\Delta V_3 = \Delta V_4 = 4.4\ V}$$

$I_1 = 2.545$

$R_1 = 1\ \Omega$

$\boxed{\Delta V_1 = 2.5\ V}$

$I_2 = 2.545$

$R_2 = 2\ \Omega$

$\boxed{\Delta V_2 = 5.1\ V}$

2. (40 pts) Three wires are arranged as shown below.

a) Find the magnitude and direction of the net magnetic field at the location of wire I3 due to the other two wires.

b) Find the magnitude and direction of the force per unit length acting on wire I3 due to the other two wires.

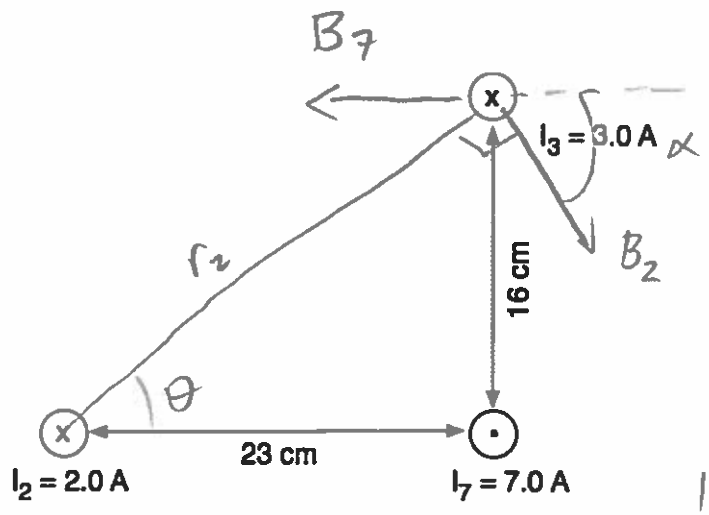

$\theta = \tan^{-1}\left(\frac{16}{23}\right) = 34.8°$

$\alpha = 90 - \theta = 55.2°$

$r_2 = \sqrt{.16^2 + .23^2} = 0.28$ m

$|B_2| = \frac{\mu_0 (2.0)}{2\pi (.28)} = 1.43\ \mu T$

$|B_7| = \frac{\mu_0 (7.0)}{2\pi (.16)} = 8.75\ \mu T$

$B_{2x} = 1.43 \cos 55.2°$
$= 0.816$

$B_{2y} = -1.43 \sin 55.2°$
$= -1.17$

$B_{7x} = -8.75$

$= -7.93$

$B_{7y} = 0$

-1.17

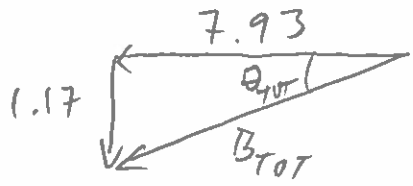

$|B_{TOT}| = \sqrt{7.93^2 + 1.17^2} = \boxed{8.0\ \mu T}$

$\theta_{TOT} = \tan^{-1}\left(\frac{1.17}{7.93}\right) = \boxed{8.4° \text{ below } -x}$

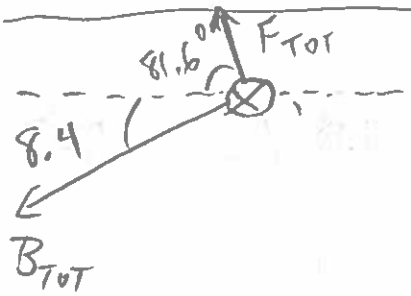

$\frac{|F_{TOT}|}{\ell} = I_3 B_{TOT} \sin 90° = \boxed{2.4 \times 10^{-5}\ N}$

$\theta = \boxed{8.2° \text{ above } -x}$

radius = 1.2 cm

#3. (30 pts) A small circular wire loop with 175 turns and a resistance of 0.234 Ohms is located 35.0 cm away from a long straight wire carrying a constant current of 7.45 Amps as shown below.

At t = 0, the loop begins to move away from the straight wire with a constant speed. After 0.550 seconds have elapsed, the loop is now 85.0 cm away from the wire. During this time interval, what is the magnitude and direction of the induced current in the loop?

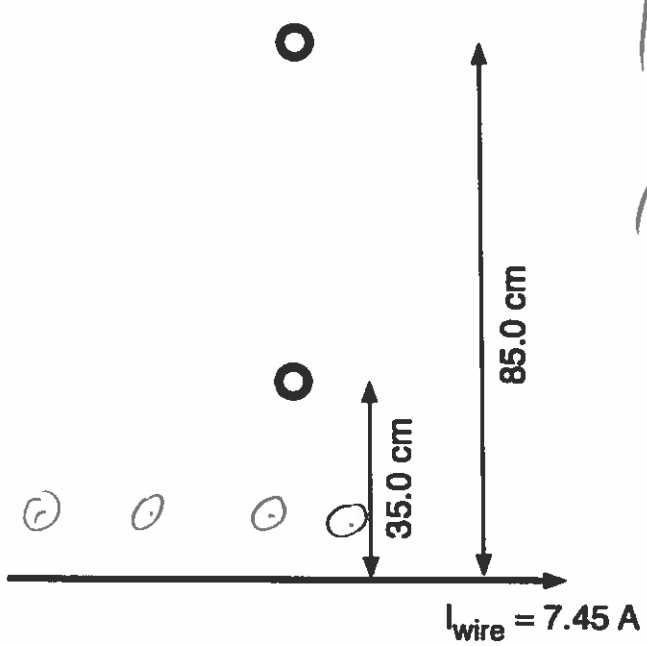

$$|B_i| = \frac{\mu_0 (7.45)}{2\pi (.35)} = 4.26\ \mu T$$

$$|B_f| = \frac{\mu_0 (7.45)}{2\pi (.85)} = 1.75\ \mu T$$

$$\mathcal{E}_{ind} = \frac{N \Delta B A \cos\theta}{\Delta t}$$

$$\mathcal{E}_{ind} = \frac{(175)(4.26 - 1.75)\pi (.012)^2 (1)}{.550}$$

$$= 3.62 \times 10^{-7} \text{ Volts}$$

$$I_{ind} = \mathcal{E}_{ind}/R = \boxed{1.54 \times 10^{-6}\ A}$$

$\Phi_B = \odot$, decreasing

$\Rightarrow B_{ind} = \odot$

$\Rightarrow \boxed{I_{ind} = ccw}$